IMI HEIMEIER

Made in Germany

VK

1x

9710-24.500

4 024052 298211

IMI Hydronic Engineering

14.

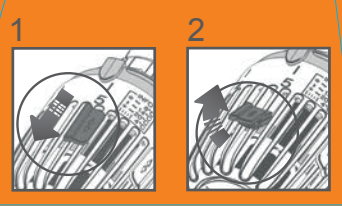

IMI Hydronic Engineering

IMI HEIMEIER

IMI Hydronic Engineering

VK

IMI HEIMEIER

IMI Hydronic Engineering

IMI HEIMEIER

IMI Hydronic Engineering

VK

IMI HEIMEIER

IMI Hydronic Engineering

imi-hydronic.com

Made in Germany

IMI HEIMEIER

9711-24.419 Index 04
06.15

IMI Hydronic Engineering Deutschland GmbH
Postfach 1124 · 59592 Erwitte
Tel.: +49 (0)2943 891-0

imi-hydronic.com

1.

2.

Danfoss RA Ø 20

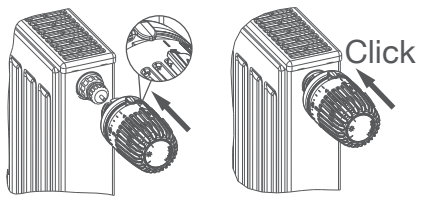

3.

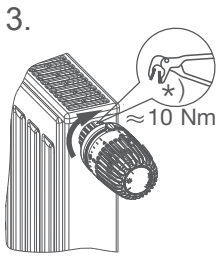

*)

4.

9710-40.500:

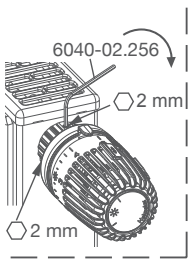

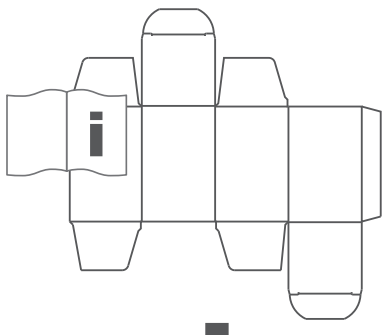

IMI HEIMEIER

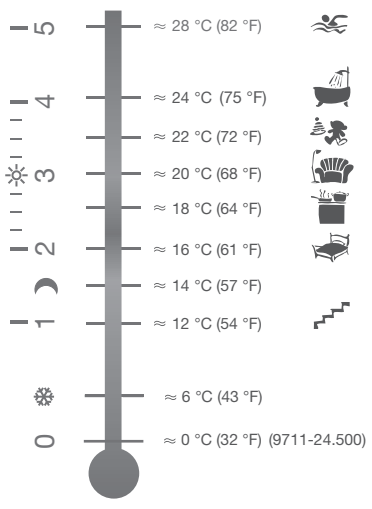

IMI HEIMEIER